NO.	REVISIONS	DATE	DEVISER
1.			
2.			
3.			

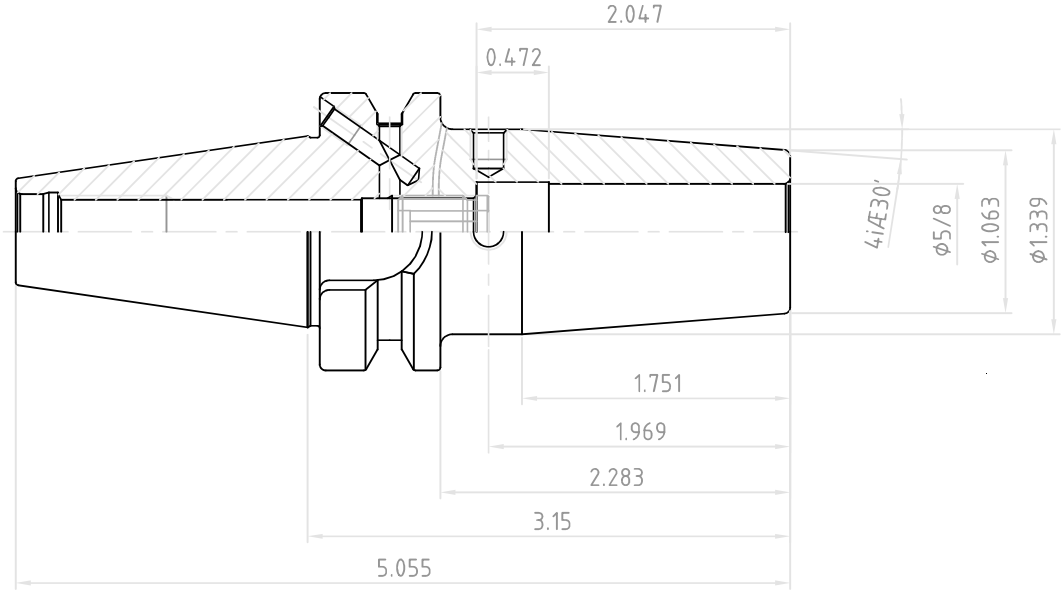

	SSK CONTROL NUMBER		
YG-1 CO., LTD.	BT30AD/B-SFH5/8(15.875)-3.150(80)		
	EDP No. VG030	SCALE	1 : 1