NO.	REVISIONS	DATE	DEVISER
1.			
2.			
3.			

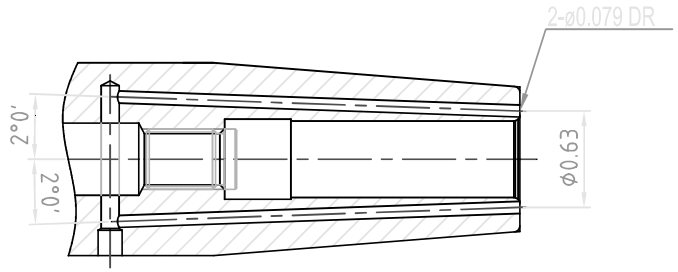

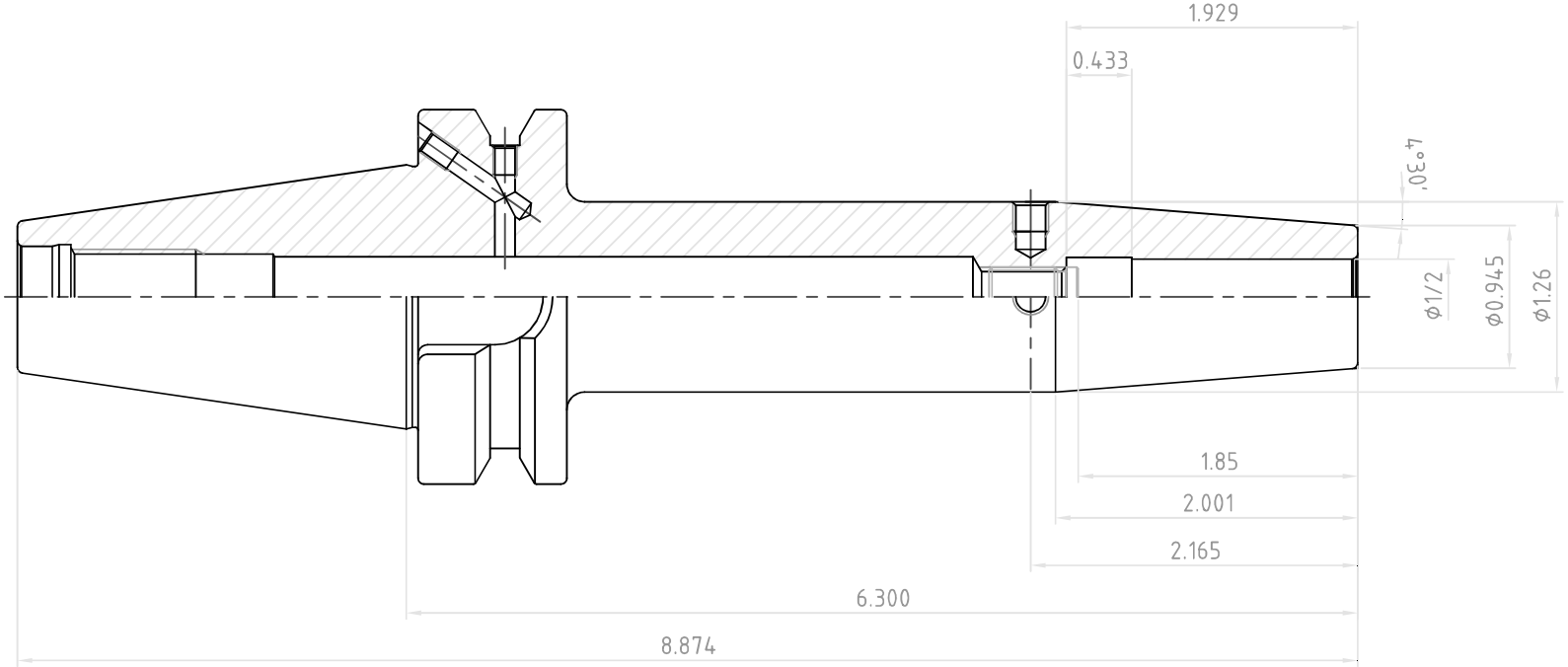

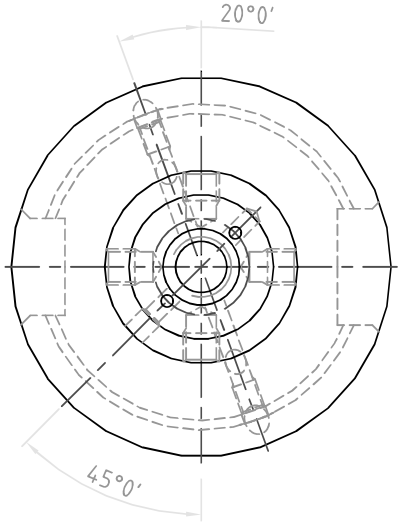

YG-1 CO., LTD.	SSK CONTROL NUMBER		
	BT40AD/B-SFH1/2(12.700)C-6.300(160)		
	EDP No.	VH034J	SCALE 1 : 1