NO.	REVISIONS	DATE	DEVISER
1.			
2.			
3.			

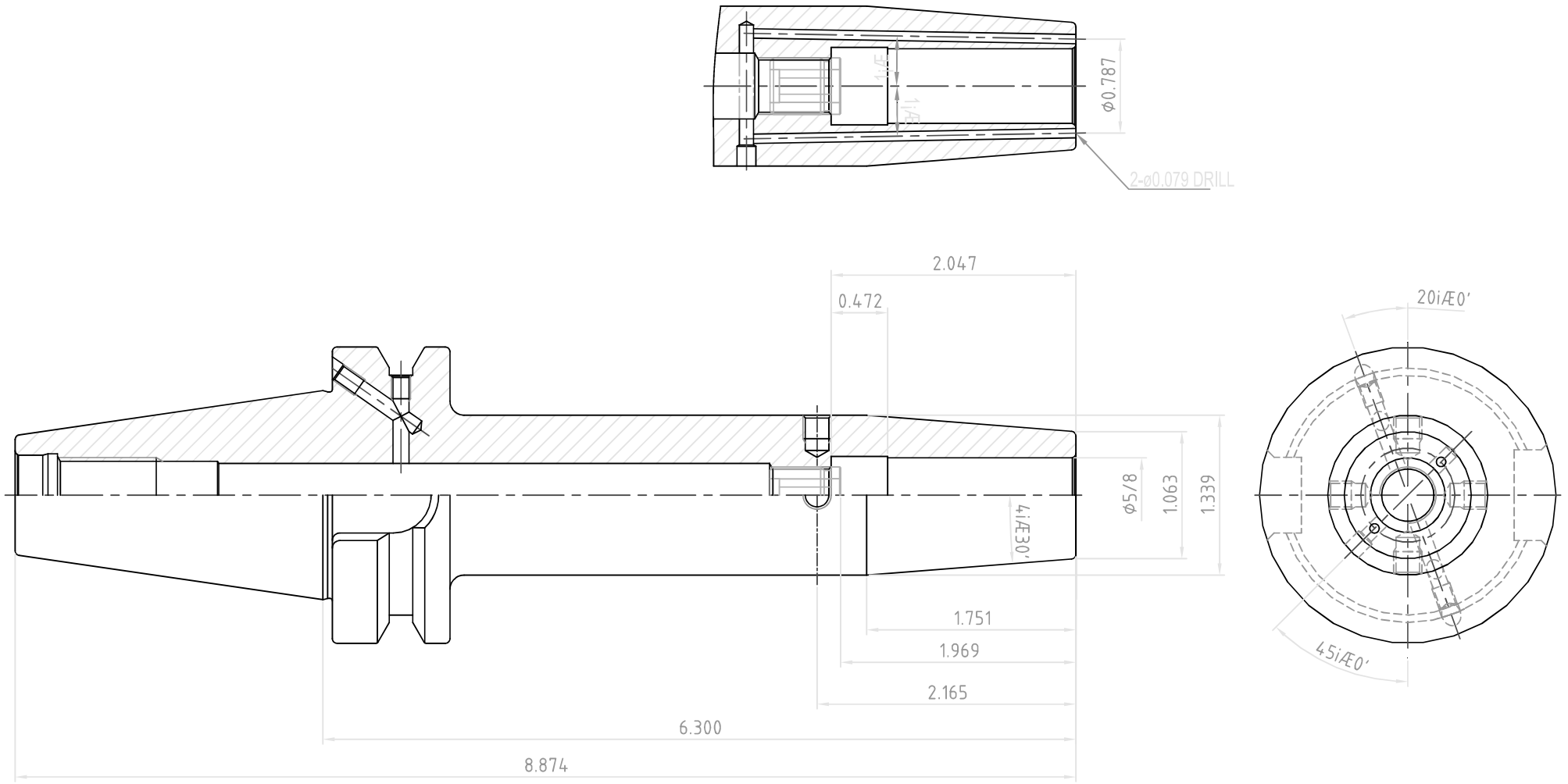

YG-1 CO., LTD.	SSK CONTROL NUMBER	BT40AD/B-SFH5/8(15.875)C-6.300(160)
	EDP No. VH038J	SCALE 1 : 1