NO.	REVISIONS	DATE	DEVISER
1.			
2.			
3.			

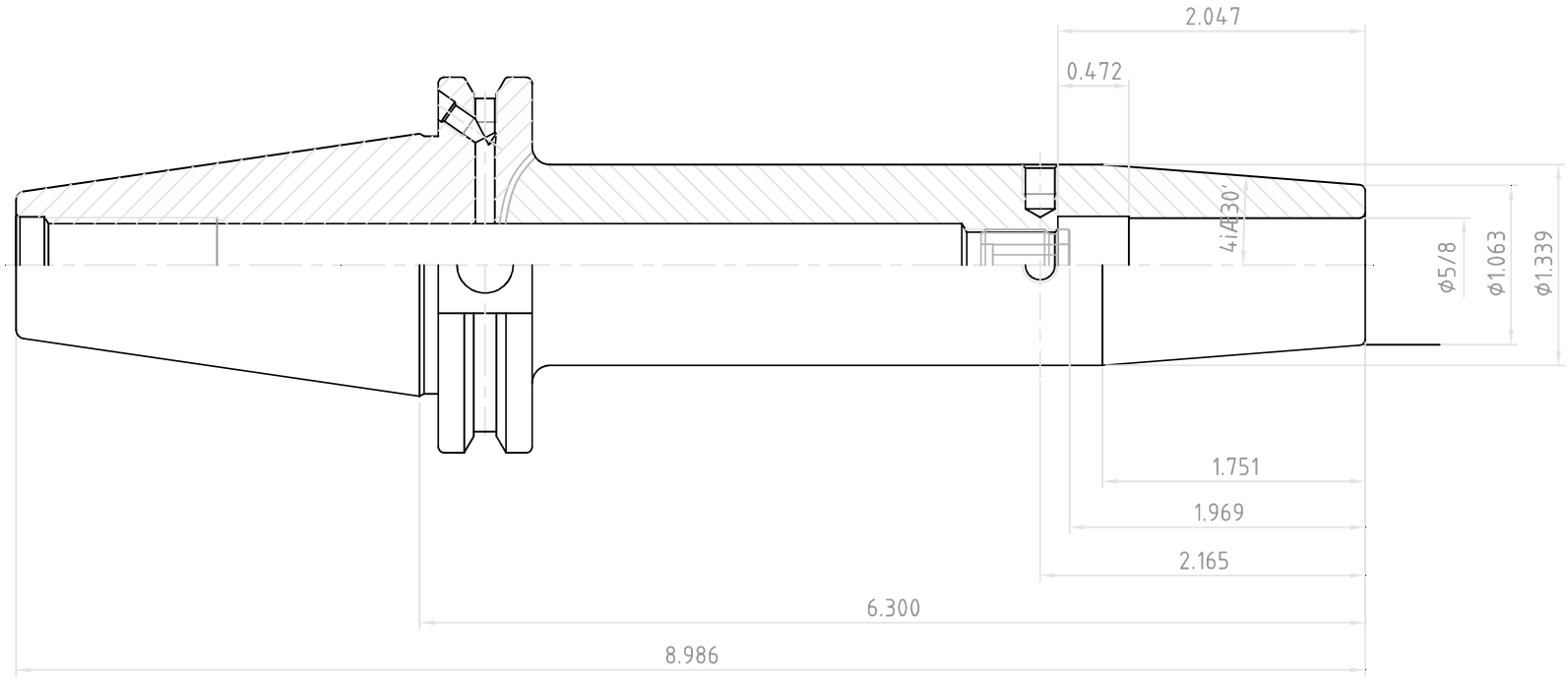

YG-1 CO., LTD.

SSK CONTROL NUMBER

CAT40AD/B-SFH5/8(15.875)-6.300(160)

EDP No. VK038 SCALE 1 : 1