NO.	REVISIONS	DATE	DEVISER
1.			
2.			
3.			

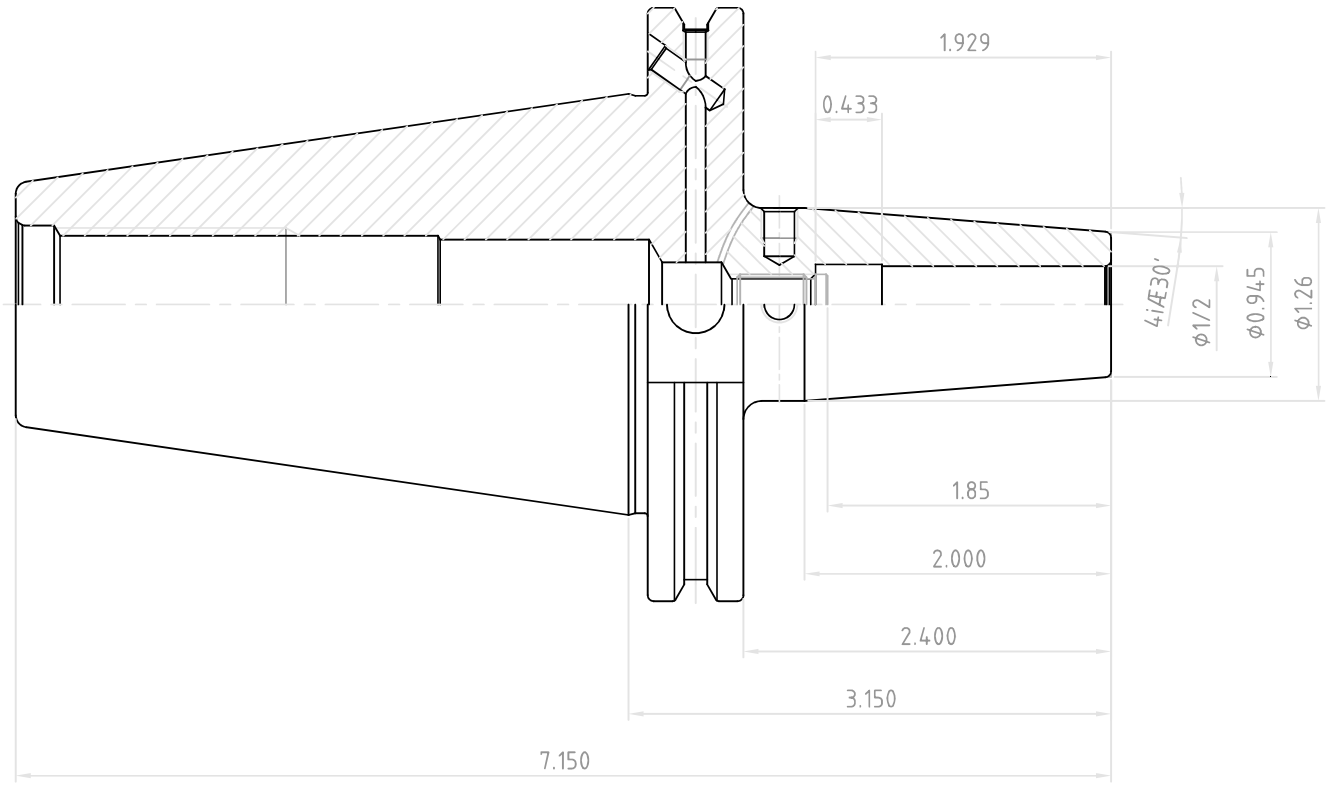

YG-1 CO., LTD.	SSK CONTROL NUMBER		
	CAT50AD/B-SFH1/2(12.700)-3.150(80)		
	EDP No. VL032	SCALE	1 : 1