NO.	REVISIONS	DATE	DEVISER
1.			
2.			
3.			

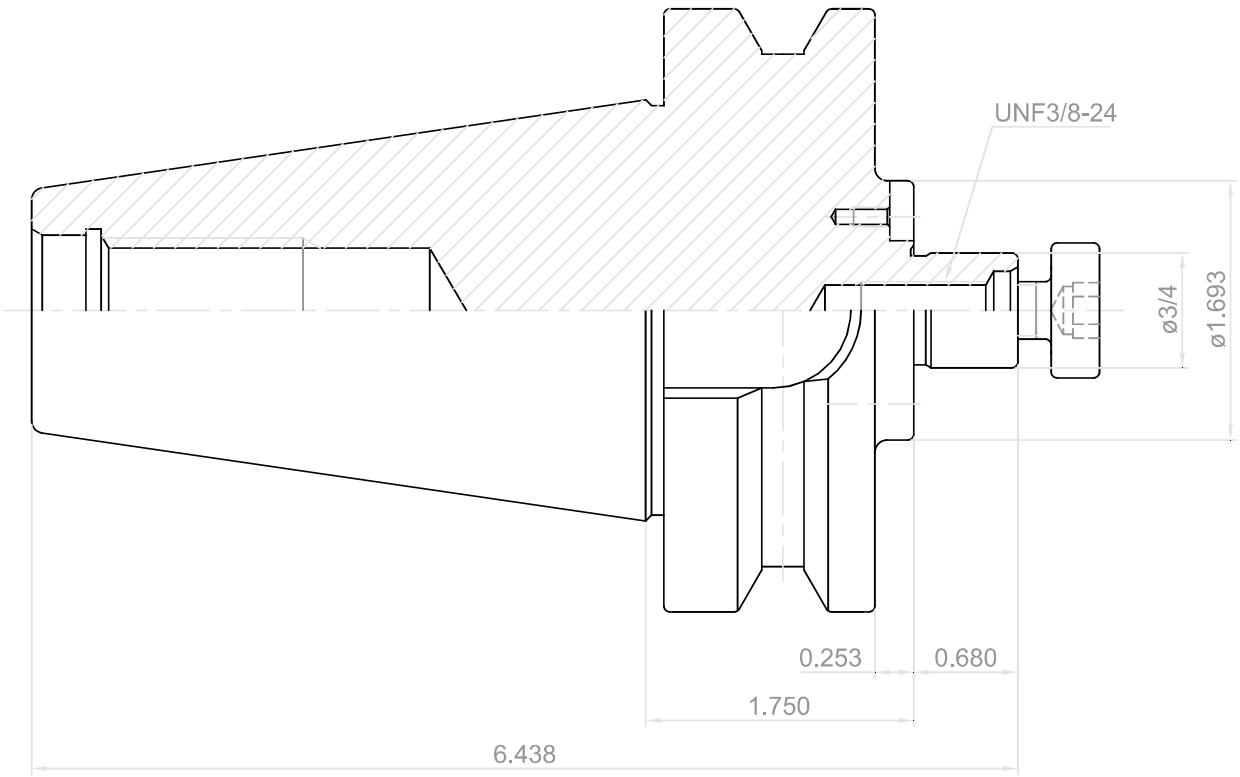

	DESCRIPTION		
YG-1 CO., LTD.	BT50-SMA3/4(19.05)-1.75(44.45)		
	EDP No.	EI010	SCALE 1 : 1