NO.	REVISIONS	DATE	DEVISER
1.			
2.			
3.			

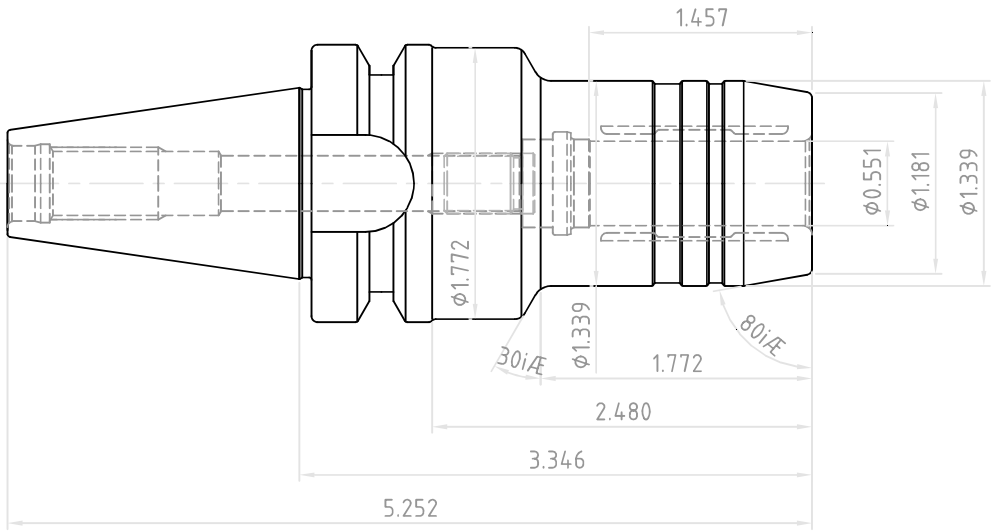

	DESCRIPTION		
YG-1 CO., LTD.	BT30-HC0.55(14)-3.35(85)		
	EDP No.	WG108	SCALE 1 : 1