NO.	REVISIONS	DATE	DEVISER
1.			
2.			
3.			

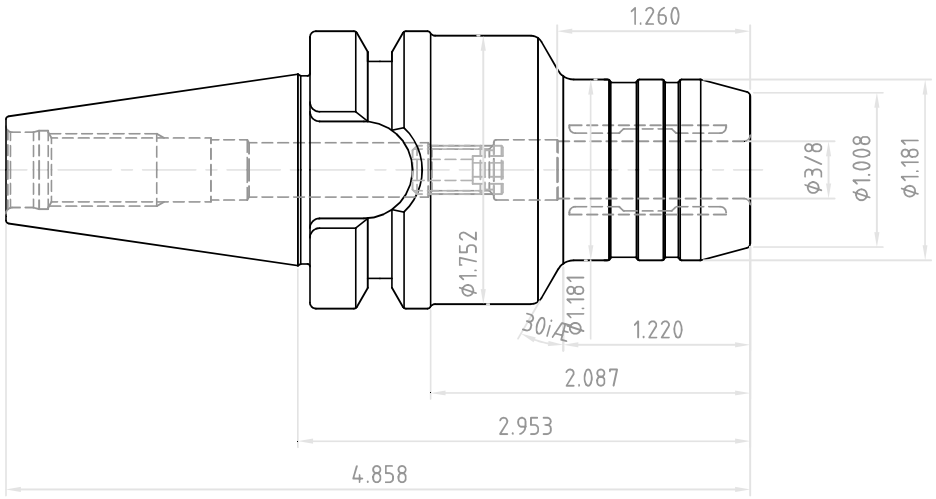

	DESCRIPTION		
YG-1 CO., LTD.	BT30-HC3/8(9.525)-2.95(75)		
	EDP No.	WG024	SCALE 1 : 1