NO.	REVISIONS	DATE	DEVISER
1.			
2.			
3.			

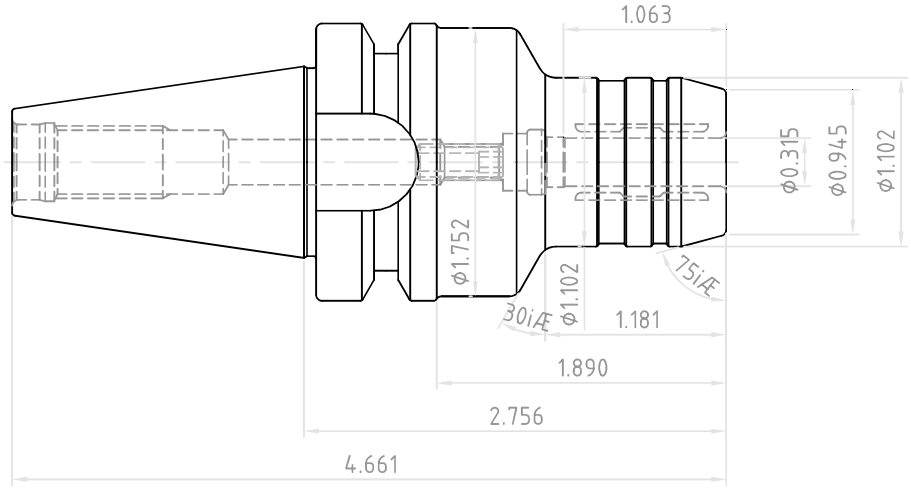

	DESCRIPTION		
YG-1 CO., LTD.	BT30-HC0.31(8)-2.75(70)		
	EDP No.	WG102	SCALE 1 : 1