| NO. | REVISIONS | DATE | DEVISER |
|---|---|---|---|
| 1. | | | |
| 2. | | | |
| 3. | | | |

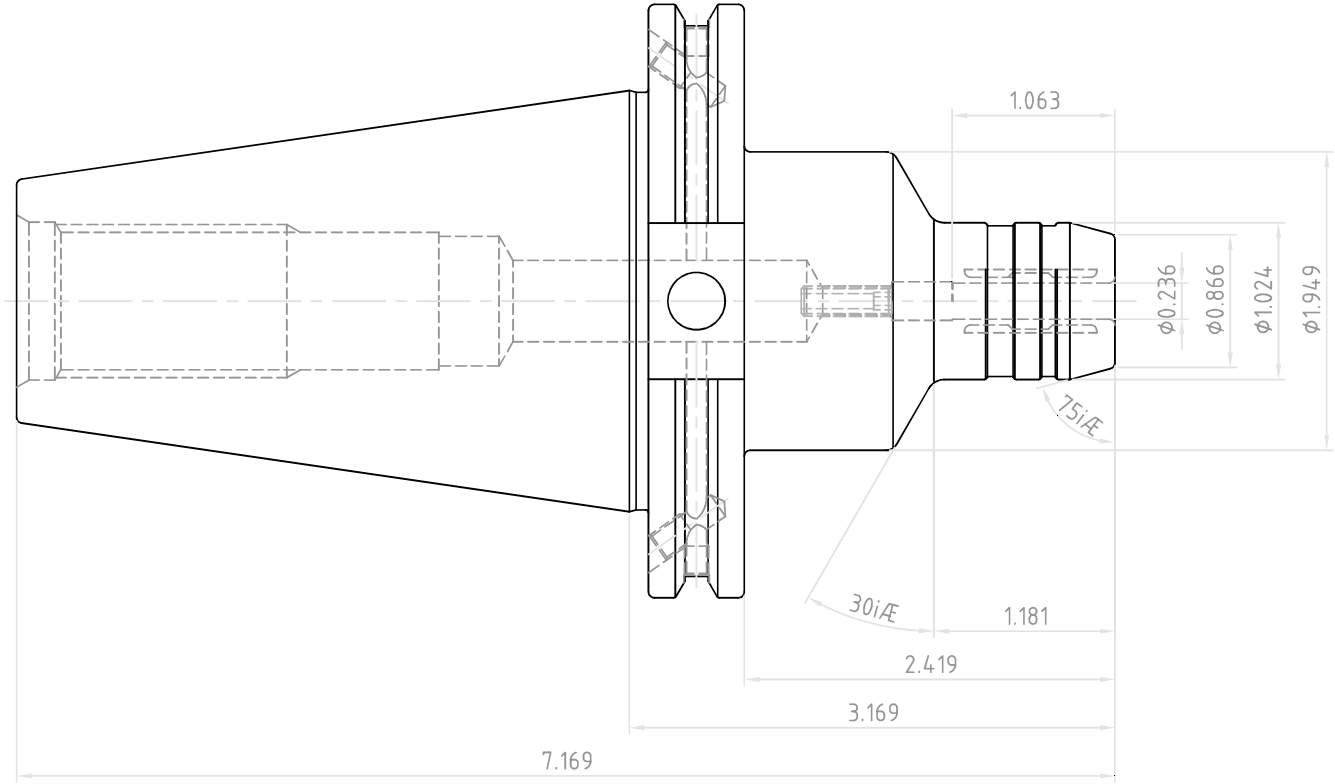


| | DESCRIPTION | | |
|---|---|---|---|
| YG-1 CO., LTD. | CAT50AD/B-HC0.24(6)-3.17(80.5) | | |
| | EDP No. | WL060 | SCALE 1 : 1 |