NO.	REVISIONS	DATE	DEVISER
1.			
2.			
3.			

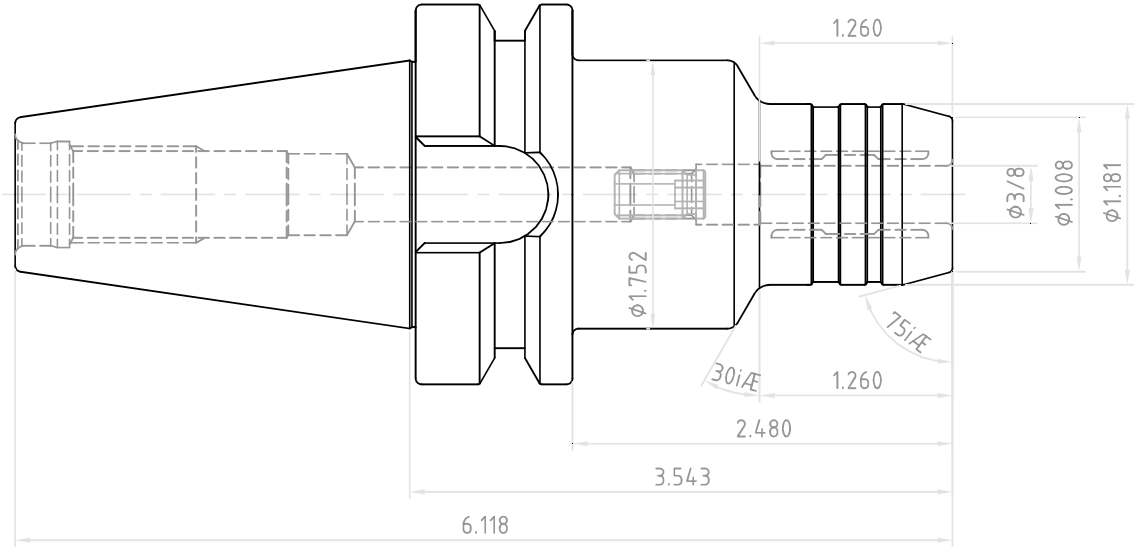

	DESCRIPTION		
YG-1 CO., LTD.	CBT40-HC3/8(9.52)-3.54(90)		
	EDP No.	WE024	SCALE 1 : 1