NO.	REVISIONS	DATE	DEVISER
1.			
2.			
3.			

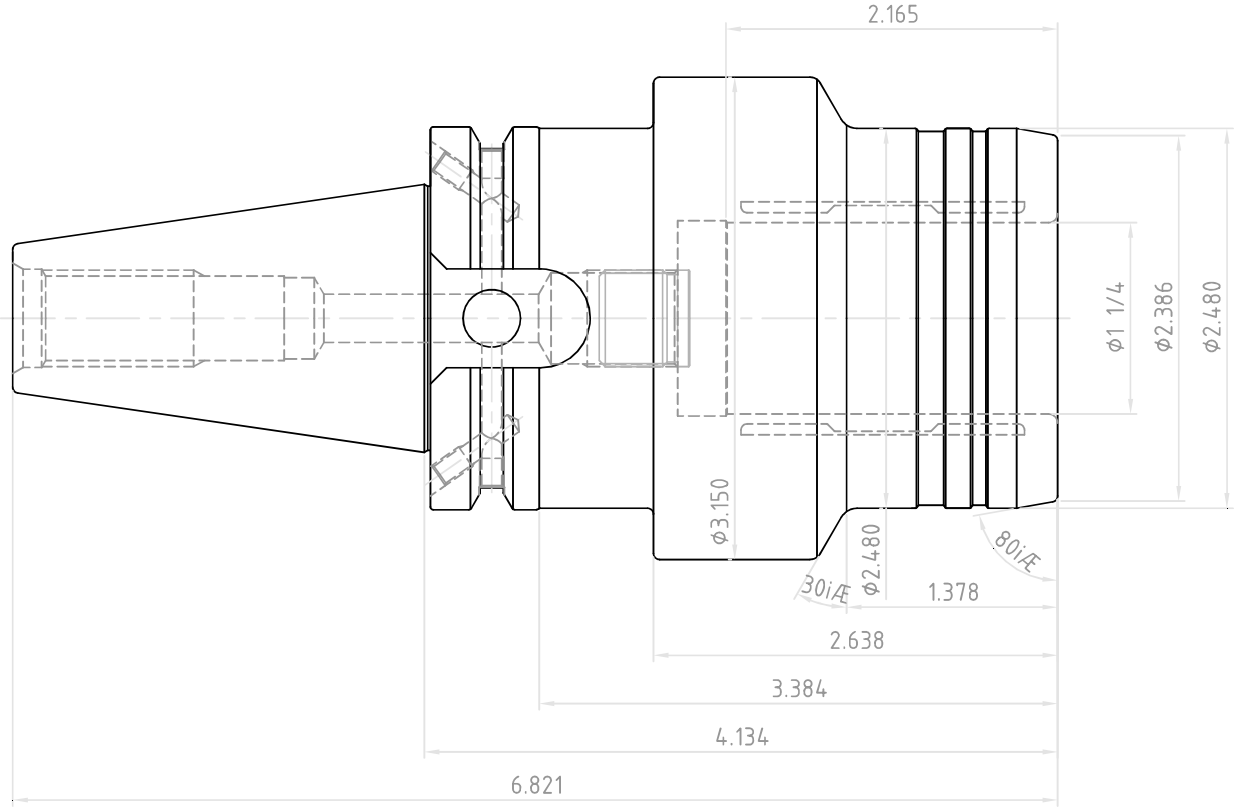

	DESCRIPTION		
YG-1 CO., LTD.	CCT40AD/B-HC1 1/4(31.75)-4.13(105)		
	EDP No.	WB034	SCALE 1 : 1