NO.	REVISIONS	DATE	DEVISER
1.			
2.			
3.			

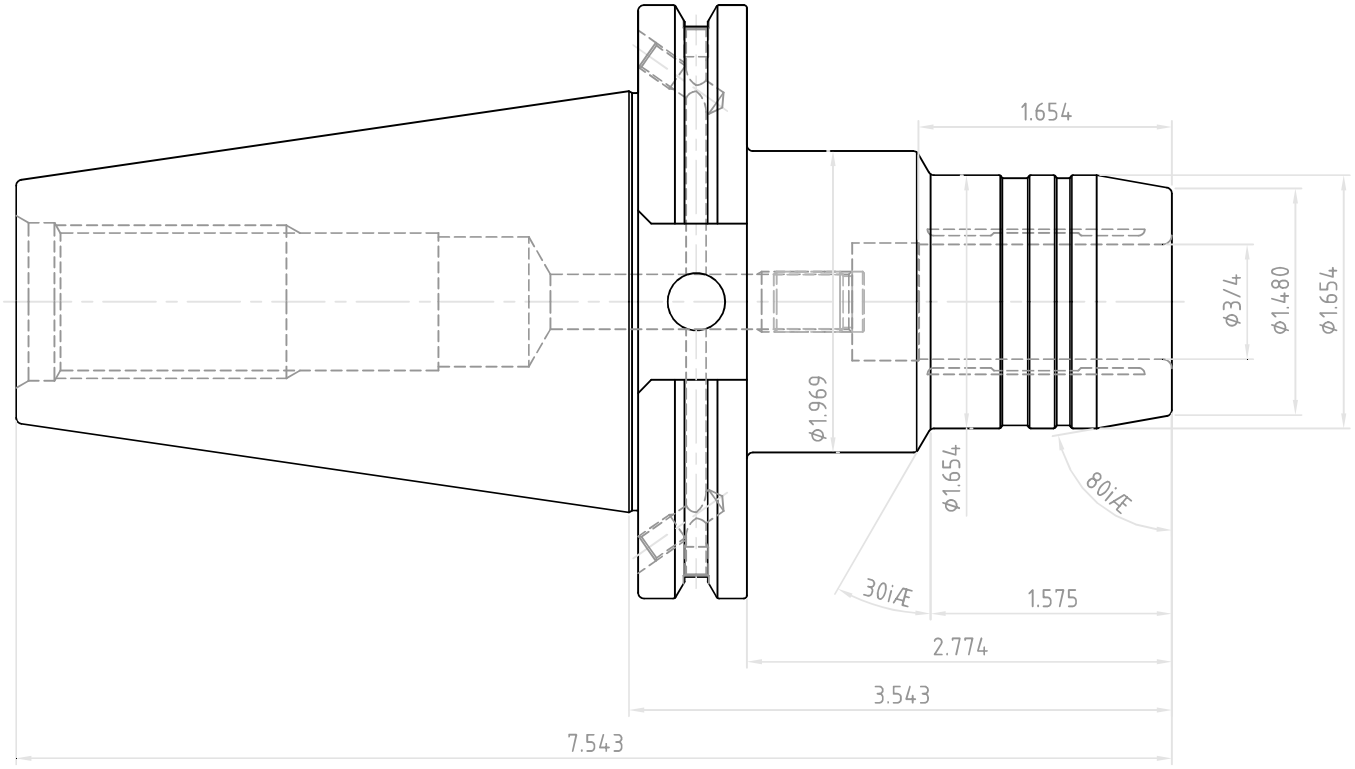

	DESCRIPTION		
YG-1 CO., LTD.	CCT50AD/B-HC3/4(19.05)-3.54(90)		
	EDP No.	WC030	SCALE 1 : 1