NO.	REVISIONS	DATE	DEVISER
1.			
2.			
3.			

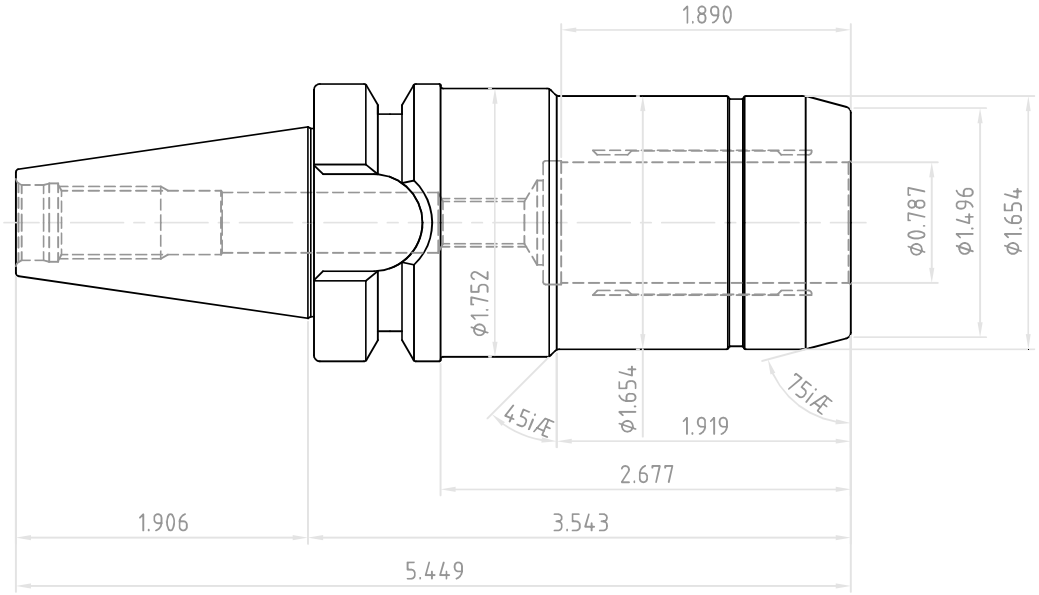

YG-1 CO., LTD.	DESCRIPTION		
	CBT30-HC20P-90		
	EDP No.	WD120PE	SCALE 1 : 1