NO.	REVISIONS	DATE	DEVISER
1.			
2.			
3.			

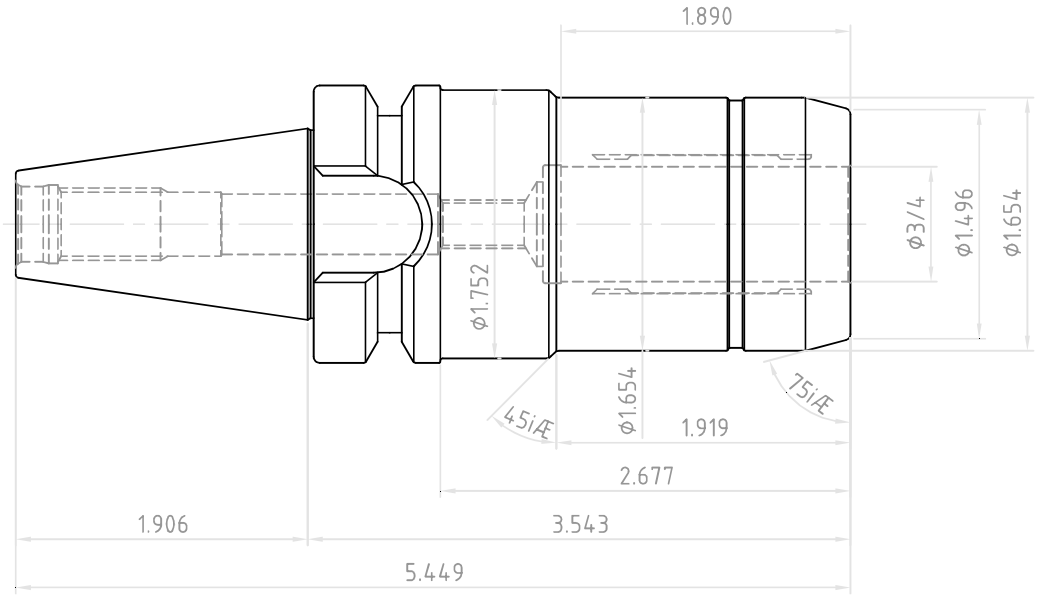

	DESCRIPTION		
YG-1 CO., LTD.	CBT30-HC3/4(19.05)P-3.543(90)		
	EDP No.	WD030PE	SCALE 1 : 1