NO.	REVISIONS	DATE	DEVISER
1.			
2.			
3.			

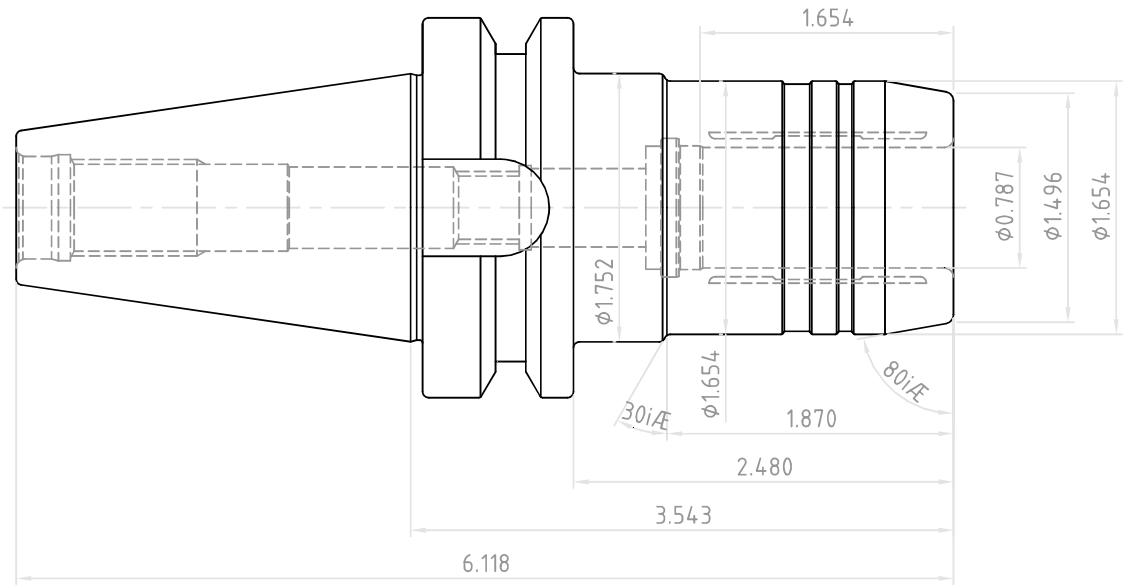

	DESCRIPTION		
YG-1 CO., LTD.	BT40AD/B-HCR0.79(20)-3.54(90)		
	EDP No.	WH102HCR	SCALE 1 : 1