NO.	REVISIONS	DATE	DEVISER
1.			
2.			
3.			

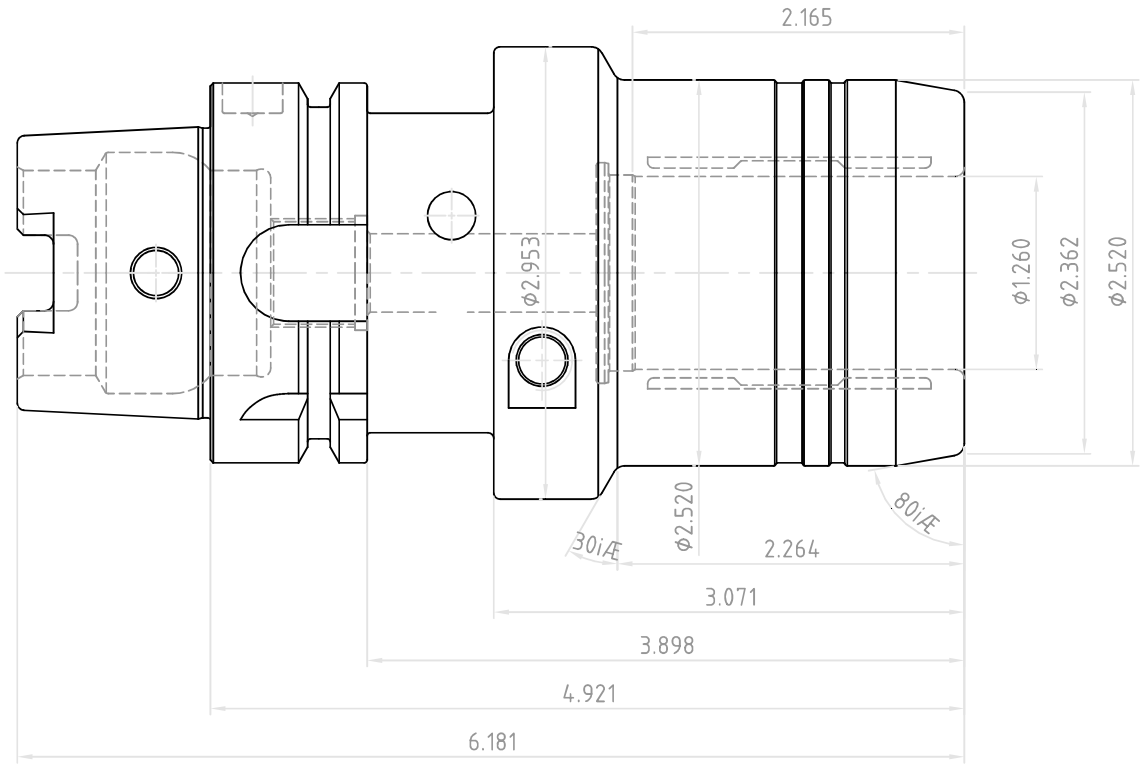

	DESCRIPTION			
YG-1 CO., LTD.	HSK63A-HCR1.26(32)-4.92(125)			
	EDP No.	WQ118HCR	SCALE	1 : 1