NO.	REVISIONS	DATE	DEVISER
1.			
2.			
3.			

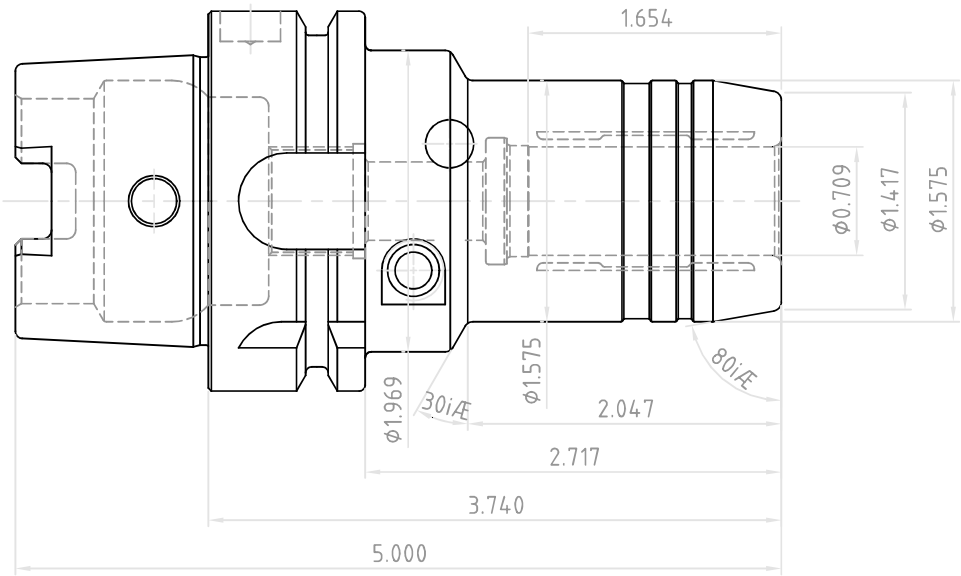

YG-1 CO., LTD.	DESCRIPTION		
	HSK63A-HCR0.71(18)-3.74(95)		
	EDP No.	WQ112HCR	SCALE 1 : 1