NO.	REVISIONS	DATE	DEVISER
1.			
2.			
3.			

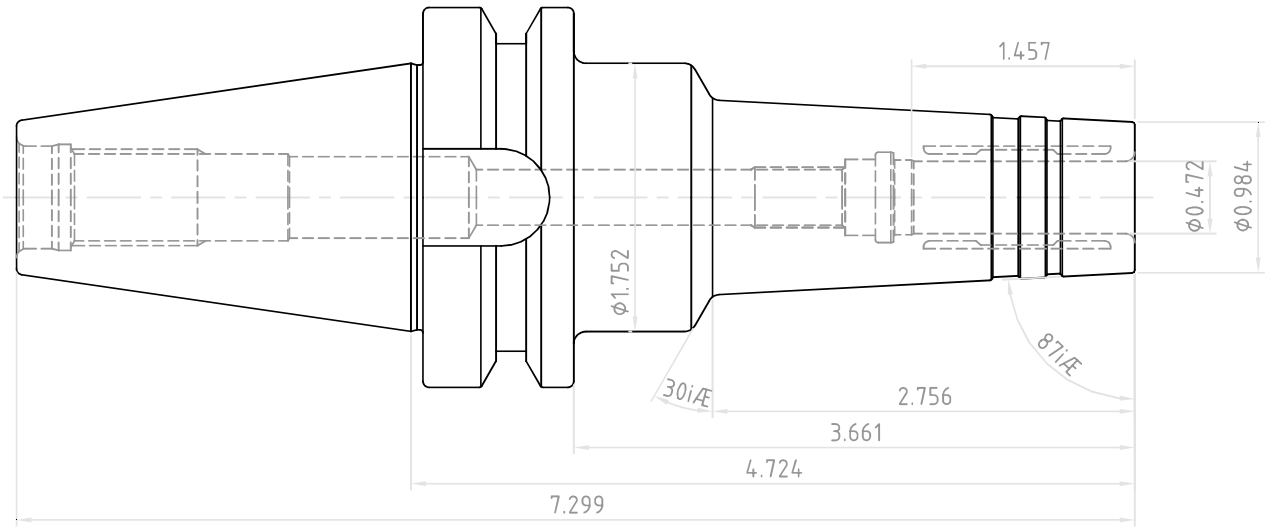

	DESCRIPTION		
YG-1 CO., LTD.	BT40AD/B-HMC0.47(12)-4.72(120)		
	EDP No.	WH112HMC	SCALE 1 : 1