NO.	REVISIONS	DATE	DEVISER
1.			
2.			
3.			

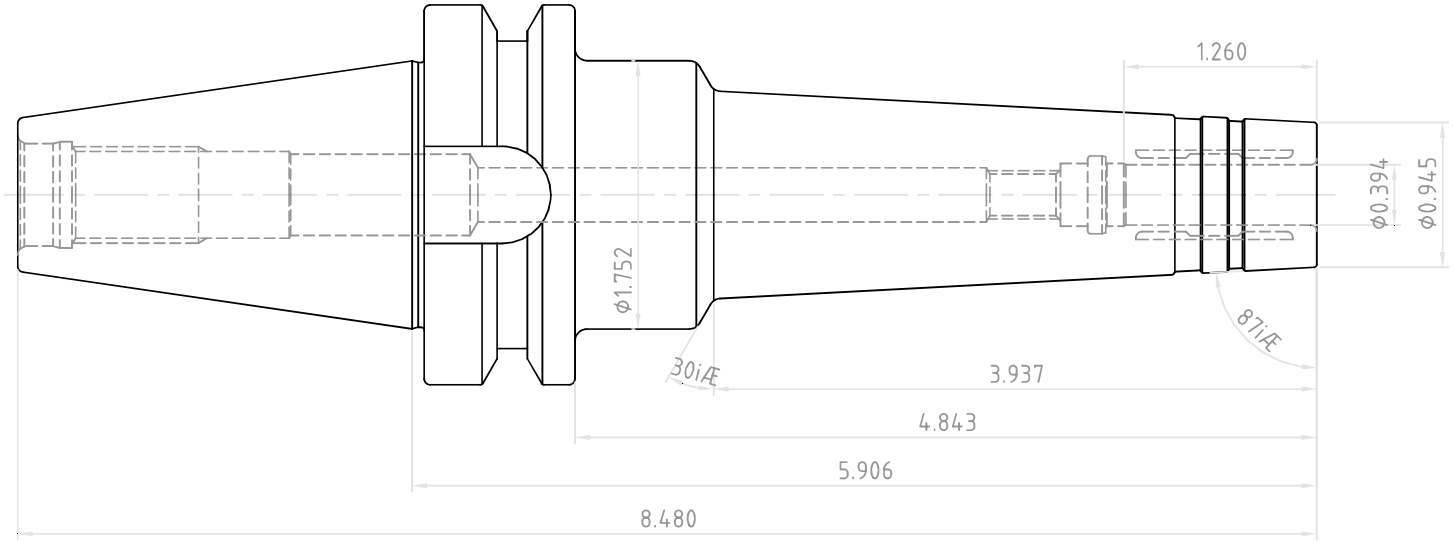

	DESCRIPTION		
YG-1 CO., LTD.	BT40AD/B-HMC0.39(10)-5.91(150)		
	EDP No.	WH110HMC	SCALE 1 : 1