NO.	REVISIONS	DATE	DEVISER
1.			
2.			
3.			

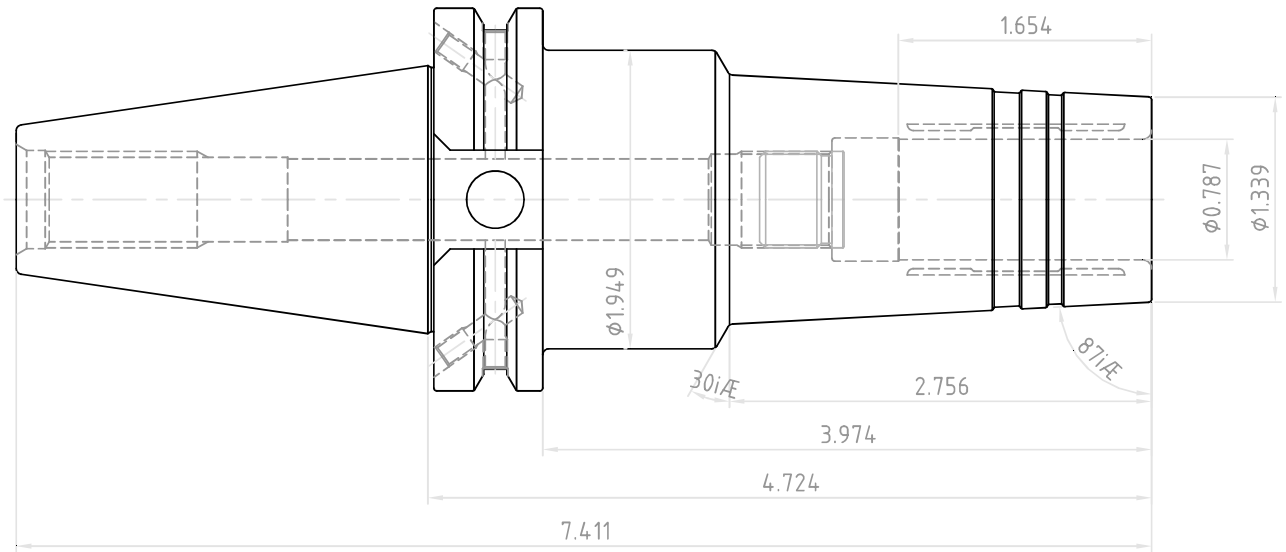

	DESCRIPTION		
YG-1 CO., LTD.	CCT40AD/B-HMC0.79(20)-4.72(120)		
	EDP No.	WB120HMC	SCALE 1 : 1