| NO. | REVISIONS | DATE | DEVISER |
|---|---|---|---|
| 1. | | | |
| 2. | | | |
| 3. | | | |

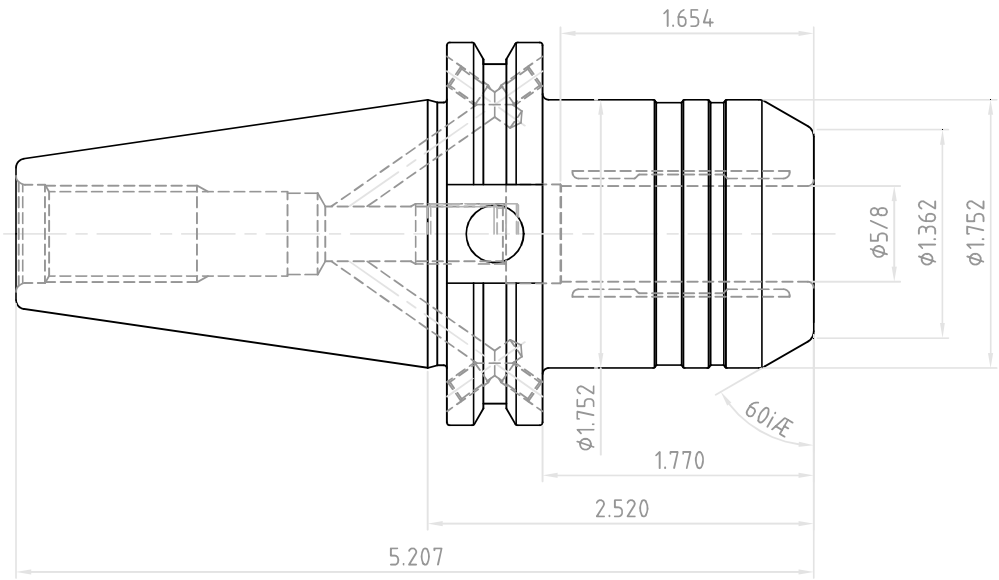


| | DESCRIPTION | | |
|---|---|---|---|
| YG-1 CO., LTD. | CAT40AD/B-HC5/8S(15.875)-2.52(64) | | |
| | EDP No. | WK021SNR | SCALE 1 : 1 |