NO.	REVISIONS	DATE	DEVISER
1.			
2.			
3.			

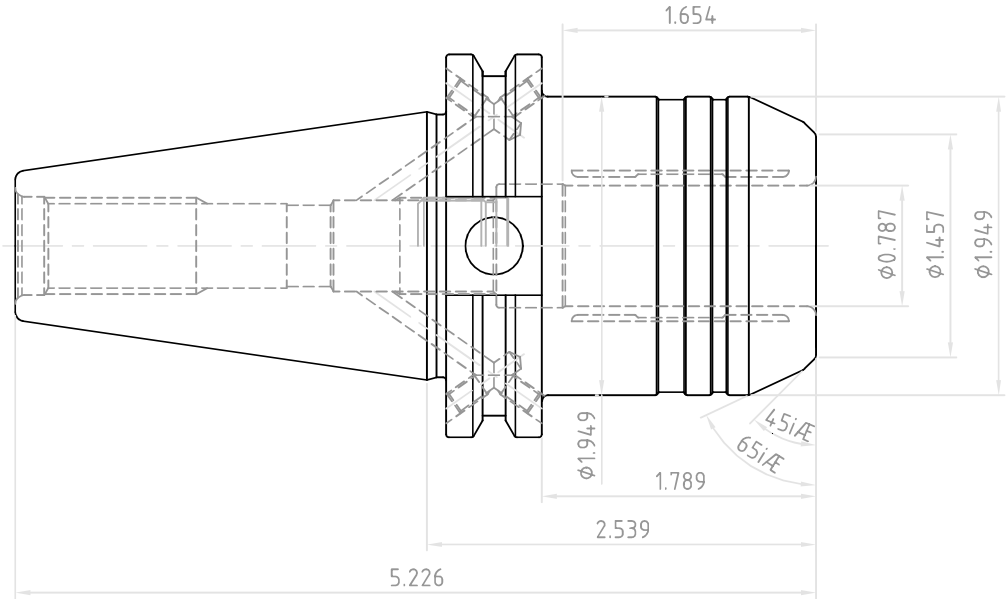

	DESCRIPTION		
YG-1 CO., LTD.	CAT40AD/B-HC0.79S(20)-2.54(64.5)		
	EDP No.	WK102SNR	SCALE 1 : 1