NO.	REVISIONS	DATE	DEVISER
1.			
2.			
3.			

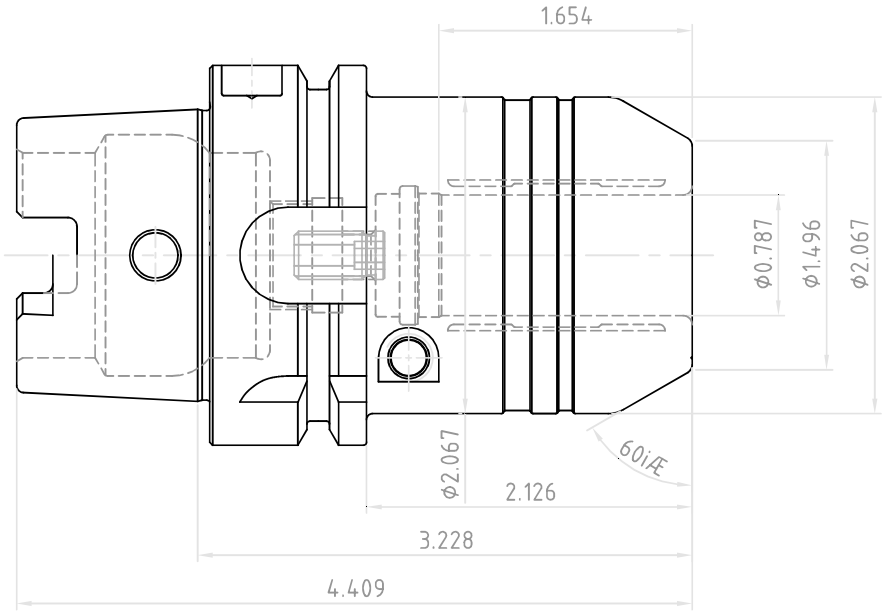

	DESCRIPTION			
YG-1 CO., LTD.	HSK63A-HC0.79S(20)-3.15(80)			
	EDP No.	WQ102SNR	SCALE	1 : 1